ACRYLIC PLASTIC FLOW METER

With Alarm Switch DS SERIES

with needle valve type
without needle valve type

Technical Data

Service: Water, Air
Wetted parts material: Body: Acrylic Plastic; O-Ring-Viton; Float-magnet cover with Nickel
Connecting material: SS316
Connecting size: 1/4", 3/8"NPT or PT female available
Mounting: vertical position
Temperature & pressure limits: 150 psig(10bar) @ 100°F(38°C)
Temperature limit: -24°C~+54°C
Accuracy: ±5% full scale
Alarm switch: one or two setting points, form A N.O. type bistable reed switch
Switch rating: AC 125V 0.5A / DC 100V 10W / Max. DC 250V<40mA
Weight: 0.55~0.6 kg
(Contact setting point should be within 10% to 80% of FS)

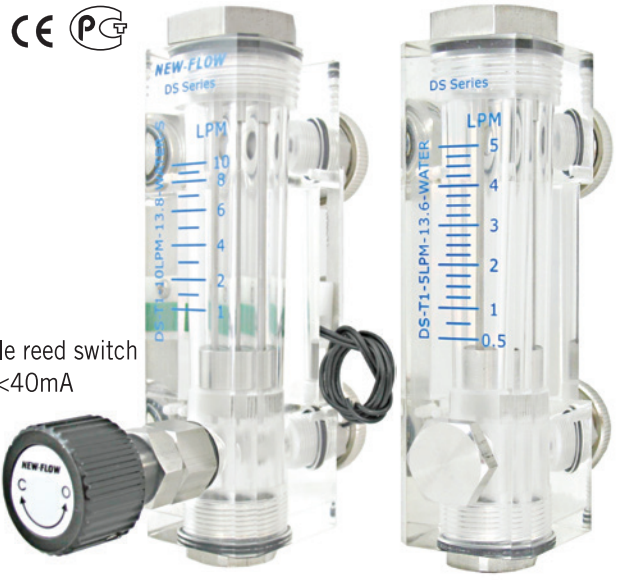

Dimensions

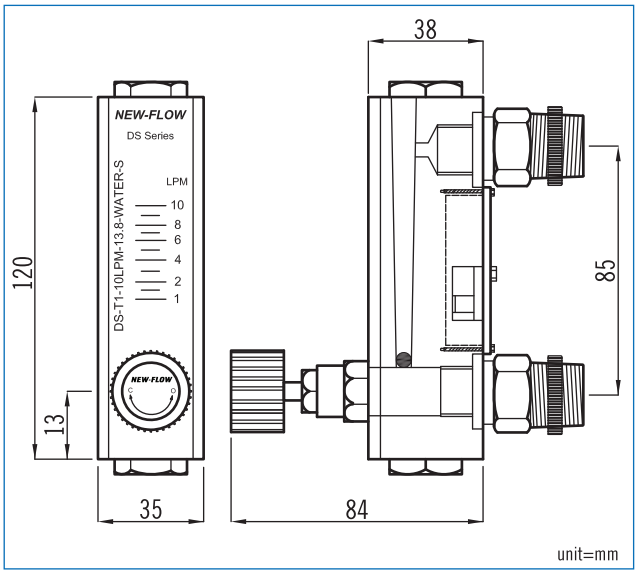

Flow Direction Types

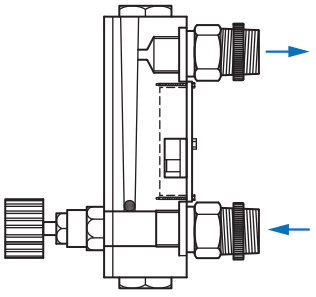

Bottom Rear to Top Rear

Ordering Information

DS	Code	Needle Valve		
	1	With	2	Without

Code	Flow Range
A-1	Water (LPH-Litter per Hour)
	(1) 20~180 **(2)** 25~250 **(3)** 30~300 **(4)** 50~500
A-2	Water (LPM-Litter per Minute)
	(5) 0.35~3 **(6)** 0.4~4 **(7)** 0.5~5 **(8)** 0.8~8
B	Air (LPM-Normal Litter per Minute)
	(9) 8~80 **(10)** 10~100 **(11)** 25~250
C-1	Water (GPH-Gallon (us) per Hour)
	(12) 5~50 **(13)** 6.5~65 **(14)** 8~80 **(15)** 13~130
C-2	Water (GPM-Gallon (us) per Minute)
	(16) 0.08~0.8 **(17)** 0.1~1 **(18)** 0.15~1.5 **(19)** 0.2~2
D	Air (SCFM-Standard Cubic Feet per Minute)
	(20) 0.3~3 **(21)** 0.35~3.5 **(22)** 0.8~8

Code	Alarm Switch
1R	One setting point
2R	Two setting points
0	Wihtout alarm

Code	Process Connection
A	1/4"NPT female
B	3/8"NPT female
C	3/8"PT female
D	1/4"PT female

Code	Flow Direction
BT	Bottom rear to Top rear

DS						Complete ordering code