# VARIABLE AREA TYPE FLOW METER (ROTAMETER)

# M-TYPE

## Technical Data

**A. Measuring The Flow Rate For**
- Gases & Liquid
- Chemical process system
- Water treatment system
- Industrial flow system

**B. Service Condition**
- Viscosity: ≤ 3 cP
- Max. working temperature: Metal: 100°C; Plastic: 60°C
- Max. working pressure:
  (1) Body material: MS: 15 kg/cm²
  MV: 6 kg/cm²
  (2) Glass tube: Borosilicate glass 6 kg/cm², Instant pressure: 8 kg/cm²
  (3) P.C tube: 10 kg/cm², Instant pressure: 15 kg/cm²

**C. Alarm Switch Available (N.O), IP67**
- Switch rating: AC 125V 0.5A / DC 100V 10W / Max. DC 250V < 40mA

**D. Accuracy:** ±4%F.S

## Operation Principle

The variable area flow meter content a float & taper tube. The fluid flow through the taper tube and force up to the float. The flow rate is measured as a function of the area of the opening. This area displayed as the float that is free to move to produce the varying area.

## Dimensions

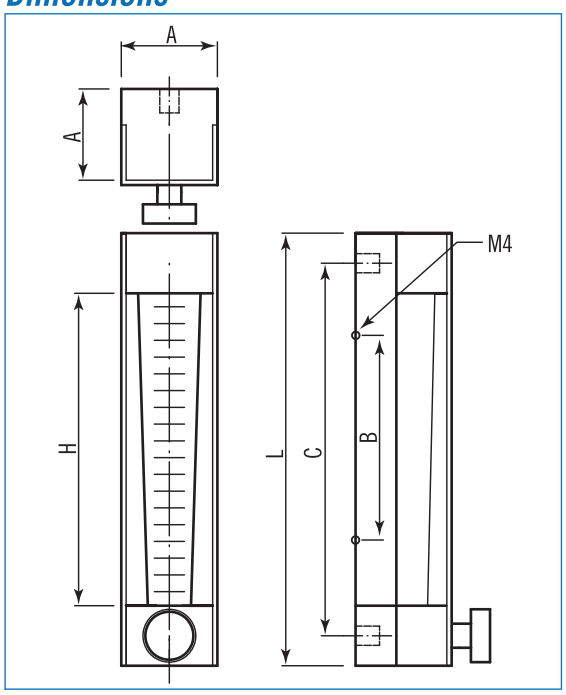


unit=mm

| Range / Size | $H_2O$ (Max.) L/Min | Air (Max.) NL/Min | Dimension | | | | | |
|---|---|---|---|---|---|---|---|---|
| | | | PT/NPT | L | H | A | C | B |
| 6A | 0.03~0.3 | 0.5~5.0 | 1/4" | 168 | 110 | 25 | 145 | 75 |
| 10A | 0.1~1.0 | 2~20 | 3/8" | 168 | 110 | 25 | 145 | 75 |
| 15A | 1~10 | 20~200 | 1/2" | 242 | 165 | 32 | 210 | 100 |
| 20A | 2~20 | 30~300 | 3/4" | 290 | 220 | 42 | 240 | 140 |
| 25A | 5~50 | 80~800 | 1" | 295 | 230 | 46 | 250 | 140 |
| 25A | – | 150~1500 | 1" | 295 | 230 | 46 | 250 | 140 |

## Ordering Information

| M-Type | Code | Model | | |
|---|---|---|---|---|
| | MS | Wetted parts are stainless steel | MV | Wetted parts are plastic |

| Code | Size |
|---|---|
| | (1) 6A (2) 10A (3) 15A (4) 20A (5) 25A |

| Code | Connection Rating |
|---|---|
| | (1) NPT (2) PT (3) option |

| Code | Body Material |
|---|---|
| | (1) SS304 (2) SS316 (3) SS316L (4) P.V.C |
| | (5) P.P (6) PVDF (7) Option |

| Code | Indicating Tube Material |
|---|---|
| | (1) Borosilicate glass (2) PC |

| Code | Float Material |
|---|---|
| | (1) SS304 (2) SS316 |
| | (3) P.V.C (4) P.P (5) PVDF |
| | (6) Teflon (0) option |

| Code | Seal Material |
|---|---|
| | (1) NBR (2) Viton (3) Teflon |

| Code | Protection Supporter Material |
|---|---|
| | (1) SS304 (2) SS316 |

| Code | Flow Range |
|---|---|
| L | 0.03~50 L/min for liquid |
| G | 0.5~1500 NL/min for gases |

| Code | Flow Direction |
|---|---|
| 1 | Horizontal |
| 2 | Vertical |

| Code | Alarm Switch |
|---|---|
| 1R | One setting point |
| 2R | Two setting point |
| 0 | Without alarm |

| M-Type | | | | | | | + | | | | | |
|---|---|---|---|---|---|---|---|---|---|---|---|---|